LED FLOODLIGHT

YS00-FL21

- IP66, Salt spray test and Vibration test compliance.
- Compatible with harsh environments to demonstrate the marine performance required for ship lighting.
- Long lifespan up to 40,000 hours.
- It is a high-brightness LED component that reduces power consumption to about 1/4 to 1/7 of the power of traditional lighting, reducing engine load and significantly reducing the fuel cost of power generation.
- It can be used as an LED light that can be converted into high ceiling mercury lamps in coastal plants, facilities, offshore cranes, and ships.

※The value of power consumption reduction will vary depending on the product.

Product

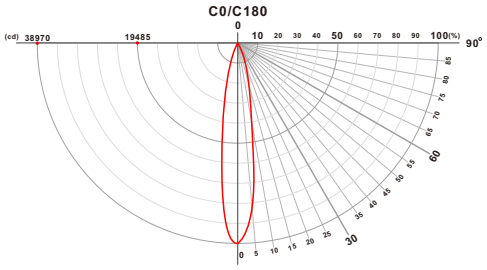

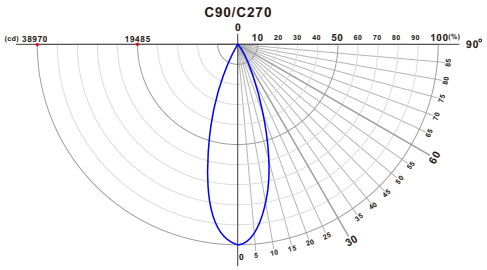

Part No.

YS00-FL21

Specification

Power Consumption	100W	Luminous Flux	3000K/11200Lm 5000K/12100Lm
Dimension	285x276x205㎜	Equivalent to conventional products	400W
Weight	6kg±10%	CRI	3000K/Ra75 5000K/Ra75
Input Voltage	AC 100V-240V	CCT	3000K 5000K
Operating Temperature	-25°C~+50°C	Beam Angle θ	35°+18°
IP code	IP 66	Lux@1m	3000K/36242Lux 5000K/38970Lux
Frequency Range	50Hz/60Hz (47Hz~63Hz)	Lifespan	40000h

Design Match

- CNS 14335 / 14165 IP66
- CNS 10255 Vibration test
- CNS 8886 Salt spray test
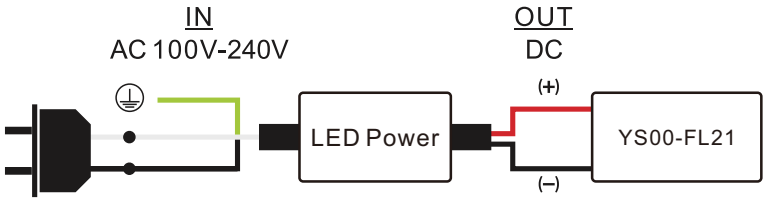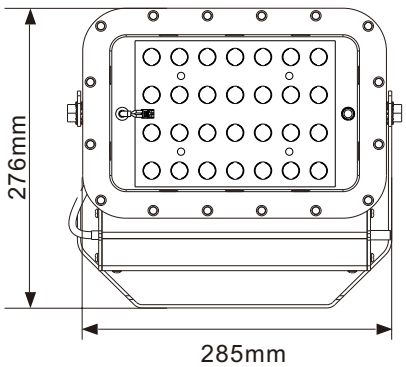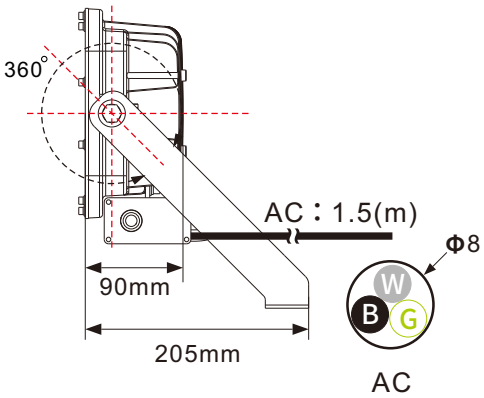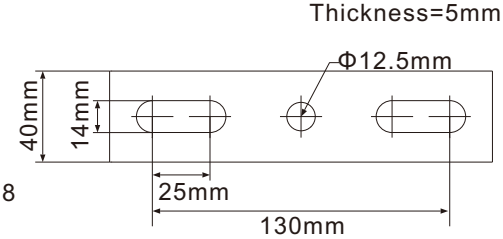
Wiring Diagram